WEIL-McLAIN®

CGa Series 3, CGi Series 4, EG Series 5, PEG Series 5, LGB Series 2

Gas-Fired Boilers

User's Information Manual

CERTIFIED ®

DESIGN CERTIFIED ®

C US

INSTALLER:
Please take time to review this User's information Manual with the boiler owner. Explain all maintenance and service procedures and the correct Operating Instructions.

WARNING If the information in this manual is not followed exactly, a fire or explosion may result, causing property damage, personal injury or loss of life.

Do not store or use **gasoline or other flammable vapors and liquids** in the vicinity of this or any other appliance.

WHAT TO DO IF YOU SMELL GAS

- **Do not try to light any appliance.**
- **Do not touch any electrical switch; do not use any phone** in your building.
- Immediately **call your gas supplier from a neighbor's phone.** Follow the gas supplier's instructions.
- **If you cannot reach your gas supplier, call the fire department.**

Installation and service must be performed by a qualified installer, service technician or the gas supplier.

Part Number 550-142-301/0420

Please read this page first

How to use this manual . . .

To . . .	Read/Use . . .	Pages . .
Learn precautions	**Warnings and definitions**	**1, 2 and 3**
Prevent air contamination	Read list of air contaminants you must avoid. **If found, either remove products permanently or isolate boiler and provide outside combustion air.**	**3**
Identify boiler components	The illustration on page 4 or 5, will show you the location of the main components.	**4-5**
Maintain boiler	Set up a **plan for maintaining the boiler** using the schedule included in this manual. Schedule an **annual start-up** by a qualified service technician before every heating season.	**6-12**
Start –or– Shutdown boiler	Use the **Operating Instruction** sheet for the gas valve installed on your boiler. Ask your service technician if you are unsure which one.	**12-18**
Troubleshoot common problems	Use the common problems/solutions table to resolve typical heating system/boiler problems.	**19**

Hazard definitions

The following defined terms are used throughout this manual to bring attention to the presence of hazards of various risk levels or to important information concerning the life of the product.

⚠ DANGER Indicates presence of hazards that **will cause severe** personal injury, death or substantial property damage.

⚠ WARNING Indicates presence of hazards that **can cause severe** personal injury, death or substantial property damage.

⚠ CAUTION Indicates presence of hazards that **will or can cause minor** personal injury or property damage.

NOTICE Indicates special instructions on installation, operation or maintenance that are important but not related to personal injury or property damage.

Boiler service and maintenance

⚠ WARNING The Boiler manual is for use only by a qualified heating installer/service technician. Refer only to this User's Information Manual for your reference. Improper installation, adjustment, alteration, service or maintenance can cause property damage, personal injury (exposure to hazardous materials) or loss of life. Installation and service must be performed by a qualified installer, service agency or the gas supplier (who must read and follow the supplied instructions before installing, servicing, or removing this boiler. This boiler contains materials that have been identified as carcinogenic, or possibly carcinogenic, to humans).

NOTICE When calling or writing about the boiler— Please have the boiler model number from the boiler rating label and the CP number from the label located on the top of the boiler next to the air inlet connection.

Freeze protection fluids —

- NEVER use automotive or standard glycol antifreeze. Use only freeze-protection fluids made for hydronic systems. Follow all guidelines given by the antifreeze manufacturer. Thoroughly clean and flush any replacement boiler system that has used glycol before installing the new boiler.

⚠ CAUTION **Frozen Water Damage Hazard**

Residences or buildings that are unattended in severely cold weather, boiler system components failures, power outages, or other electrical system failures could result in frozen plumbing and water damage in a matter of hours. For your protection, take preventative actions such as having a security system installed that operates during power outages, senses low temperature, and initiates an effective action. Consult with your boiler contractor or a home security agency.

STOP!! — Read before proceeding

WARNING **Failure to adhere to the guidelines on this page can result in severe personal injury, death or substantial property damage.**

WARNING

Air contamination

- To prevent potential of severe personal injury or death, check for products or areas listed in table at right before installing boiler. If any of these contaminants are found:
- remove contaminants permanently. **— OR —**
- isolate boiler and provide outside combustion air. See national, provincial or local codes for further information.

WARNING

Service and maintenance

- To avoid electric shock, **disconnect electrical supply** before performing maintenance.
- To avoid severe burns, **allow boiler to cool** before performing maintenance.
- You must **maintain** the boiler as outlined in the manual and have the boiler **started up and serviced at least annually by a qualified service technician** to ensure boiler/system reliability.

WARNING

Boiler operation

- **Do not block flow of combustion or ventilation air** to boiler. This boiler is equipped with a control which will automatically shut down the boiler should air or vent be blocked. If vent or air blockage is easily accessible and removable, remove it. The boiler should attempt to restart within an hour. If blockage is not obvious or cannot be removed, have the boiler and system checked by a qualified service technician.
- Should **overheating** occur **or gas supply fail to shut off**, do not turn off or disconnect electrical supply to pump. Instead, **shut off the gas supply** at a location external to the appliance.
- **Have the building monitored when it is vacant** for an extended period. Safety controls can shut down the boiler at any time. The loss of heat can result in significant damage due to freezing.

WARNING

Boiler water

- **DO NOT** use **petroleum-based** cleaning or sealing compounds in boiler system. Water seal deterioration will occur, causing leakage between sections and damage to heating system components. This can result in substantial property damage.
- DO NOT use "homemade cures" or "boiler patent medicines". Serious damage to boiler, personnel and/or property may result.
- Continual fresh makeup water will reduce boiler life. Mineral buildup in sections reduces heat transfer, overheats cast iron, and causes section failure. Addition of oxygen and other gases can cause internal corrosion. Leaks in boiler or piping must be repaired at once to prevent makeup water.
- Do not add cold water to hot boiler. Thermal shock can cause sections to crack.

DANGER **If any part of a boiler, burner or its controls has been sprayed with or submerged under water, either partially or fully, DO NOT attempt to operate the boiler until the boiler has been either replaced or completely repaired, inspected, and you are sure that the boiler and all components are in good condition and fully reliable.** Otherwise, by operating this boiler, you will cause a fire or explosion hazard, and an electrical shock hazard, leading to serious injury, death, or substantial property damage.

Saltwater Damage — The exposure of boiler components to saltwater can have both immediate and long-term effects. While the immediate effects of saltwater damage are similar to those of freshwater (shorting out of electrical components, washing out of critical lubricants, etc.), the salt and other contaminants left behind can lead to longer term issues after the water is gone due to the conductive and corrosive nature of the salt residue. Therefore, Weil-McLain equipment contaminated with saltwater or polluted water will no longer be covered under warranty and should be replaced.

Electrical Damage — If any **electrical component** or **wiring** came into contact with water, or was suspected to have come into contact with water, replace the boiler with a new Weil-McLain boiler.

Products to avoid
Spray cans containing chloro/ fluorocarbons
Permanent wave solutions
Chlorinated waxes/cleaners
Chlorine-based swimming pool chemicals
Calcium chloride used for thawing
Sodium chloride used for water softening
Refrigerant leaks
Paint or varnish removers
Hydrochloric acid/muriatic acid
Cements and glues
Antistatic fabric softeners used in clothes dryers
Chlorine-type bleaches, detergents, and cleaning solvents found in household laundry rooms
Adhesives used to fasten building products and other similar products
Excessive dust and dirt
Areas likely to have contaminants
Dry cleaning/laundry areas and establishments
Swimming pools
Metal fabrication plants
Beauty shops
Refrigeration repair shops
Photo processing plants
Auto body shops
Plastic manufacturing plants
Furniture refinishing areas and establishments
New building construction
Remodeling areas
Garages with workshops
Buildings under construction (where air is contaminated with particulates)

Boiler components

CGa Series 3

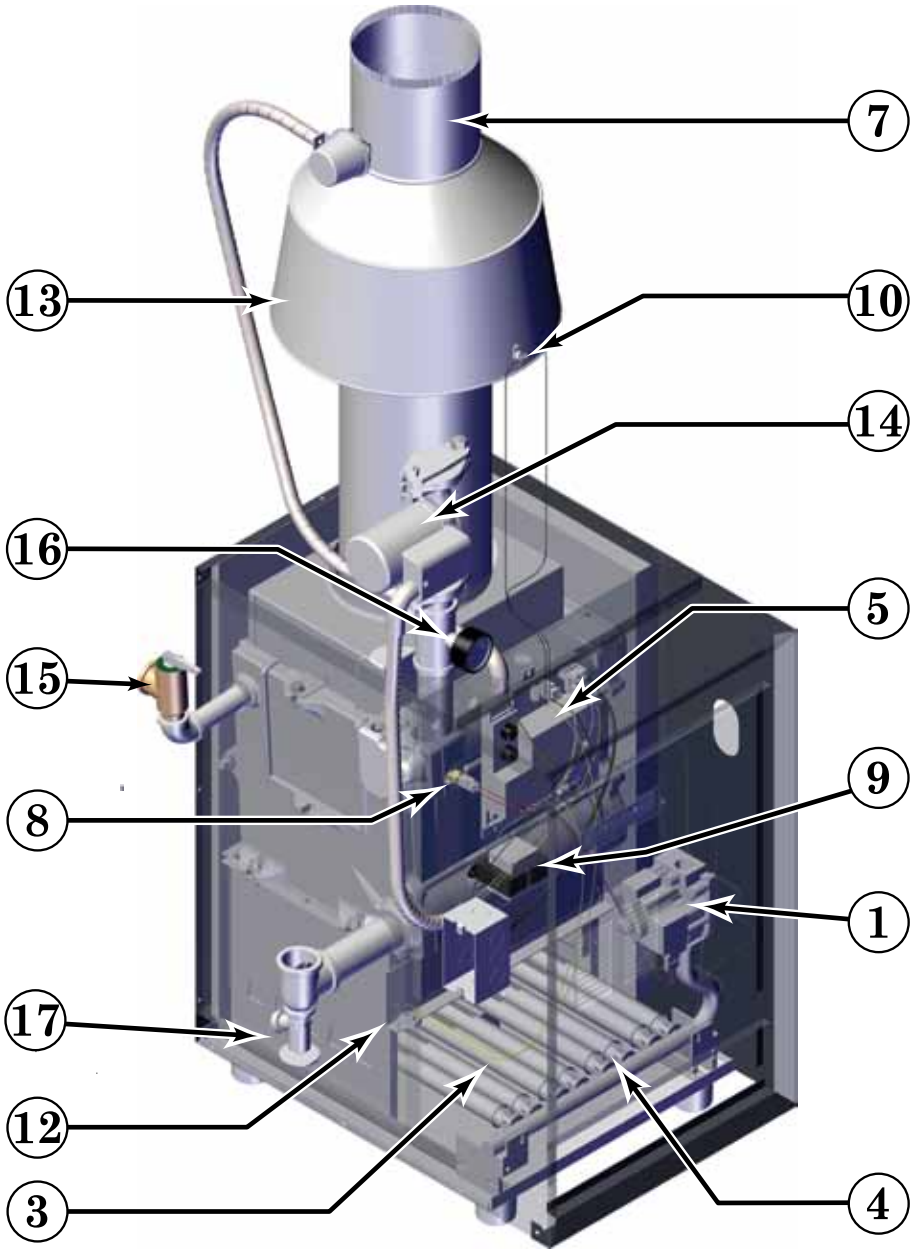

59216 -LWCO

1 Gas valve
2 Pilot burner (Not shown)
3 Main burner
4 Gas manifold/orifices
5 Control module
7 Vent damper (CGa only)
8 Water temperature/LWCO sensor
9 Transformer
10 Spill switch (CGa only)
12 Rollout thermal fuse element
13 Draft hood (CGa only)
14 Circulator
15 Relief valve
16 Gauge (pressure/temperature)
17 Drain valve

Boiler components

CGi Series 4

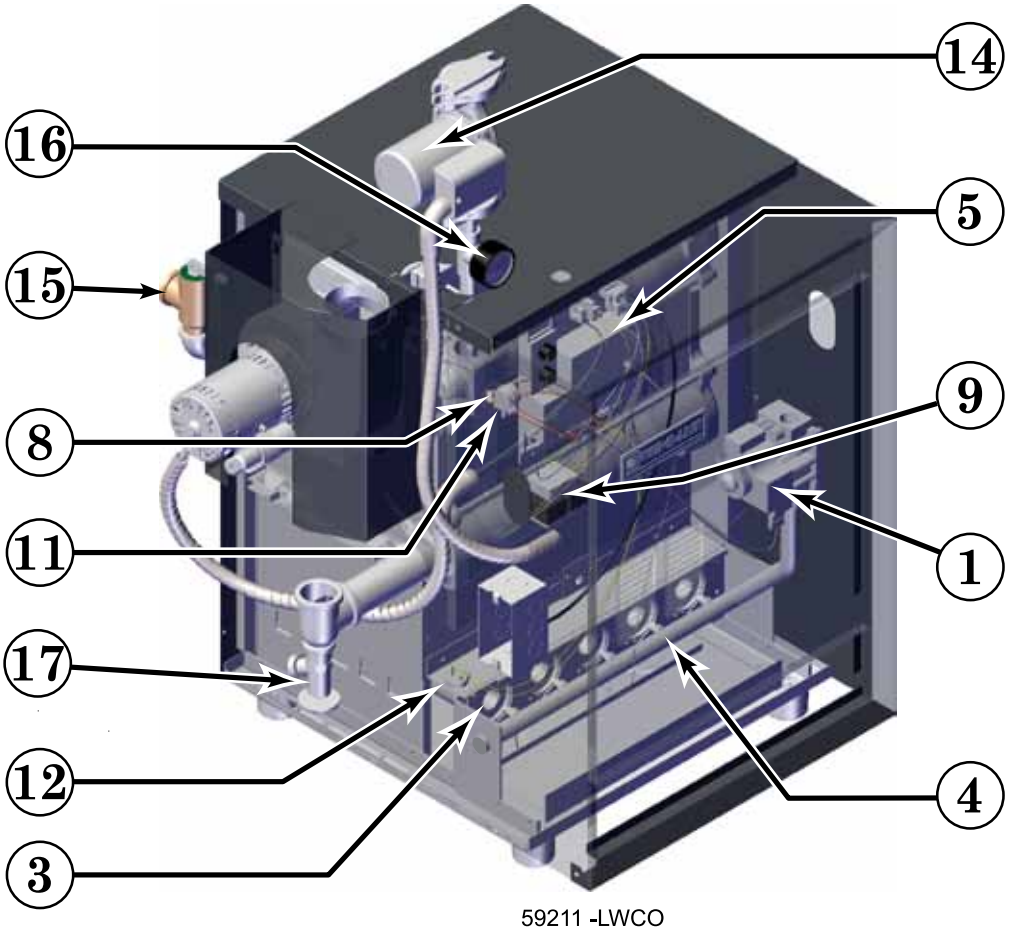

59211 -LWCO

1 Gas valve
2 Pilot burner (Not shown)
3 Main burner
4 Gas manifold/orifices
5 Control module
6 Inducer (CGi only)
8 Water temperature/LWCO sensor
9 Transformer
11 Air pressure switch (CGi only)
12 Rollout thermal fuse element
14 Circulator
15 Relief valve
16 Gauge (pressure/temperature)
17 Drain valve

Boiler components

EG/PEG

1 Gas valve
2 Pilot burner
3 Main burner
4 Gas manifold/orifices
5 Control module
7 Vent damper
9 Transformer
10 Spill switch
12 Rollout thermal fuse element
13 Low water cutoff (steam boilers)
14 Limit control(s)
15 Draft hood
16 Circulator
18 Gauge (pressure or pressure/temperature)
19 Gauge glass (steam only)
20 Water temperature/LWCO sensor
(For EG/PEG water boilers - not shown)

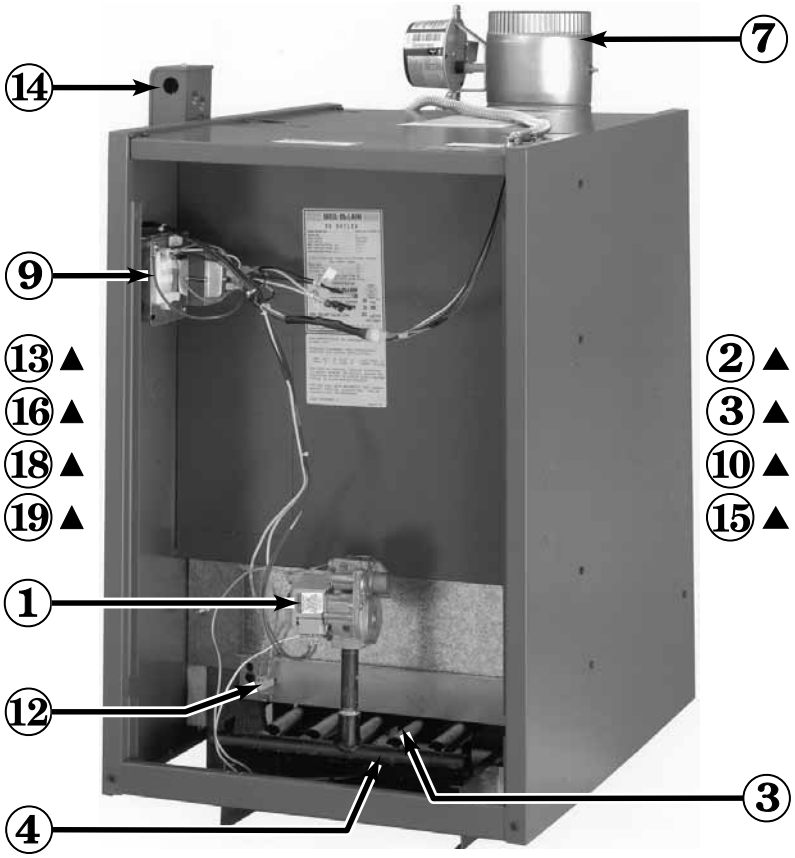

▲ Not shown

59213

LGB

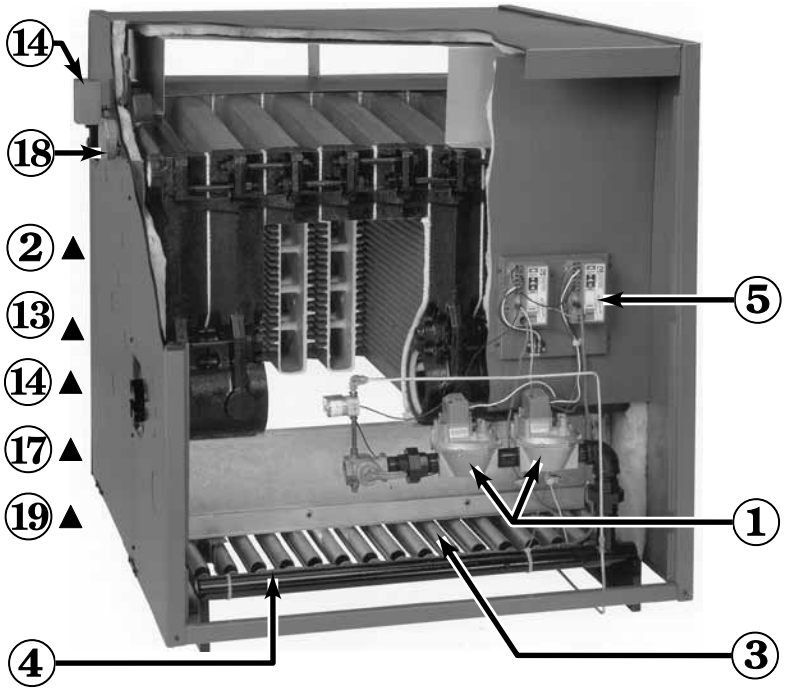

▲ Not shown

59214

1 Gas valve
2 Pilot burner
3 Main burner
4 Gas manifold/orifices
5 Control module
7 Vent damper
9 Transformer
10 Spill switch
12 Rollout thermal fuse element
13 Low water cutoff (steam boilers)
14 Limit control(s)
15 Draft hood
16 Circulator
18 Gauge (pressure or pressure/temperature)
19 Gauge glass (steam only)

Maintain boiler using schedule below

Service technician (covered in Boiler Manual – for use only by a qualified service technician)	
Annual start-up	**Inspect:** • Reported problems • Boiler area • Air openings • Flue gas vent system • Pilot and main burner flames • Water piping • Boiler heating surfaces • Burners, base and inlet air box • Condensate drain system **Service:** • Oiled-bearing circulators • Temperature/LWCO sensor **Start-up:** • Perform start-up per manual **Check/test:** • Gas piping • Cold fill and operating pressures • Air vents and air elimination • Limit controls and cutoffs • Expansion tank • Boiler relief valve **Review:** • Review with owner

Owner maintenance (see following pages for instructions)	
Daily	• Check boiler area • Check air openings • Check boiler pressure/ temperature gauge
Monthly	• Check boiler interior piping • Check venting system • Check air vents • Check boiler relief valve • Check automatic air vents (if used)
Periodically	• Test low water cutoff
Every 6 months	• Operate relief valve
End of season	• Shut down procedure

Tankless water heater (EG and PEG only)

If boiler is used to supply domestic hot water, limit control should be set to supply adequate hot water. Weil-McLain tankless heaters are rated at 200 °F boiler water temperature. To get rated output, set low limit at 200 °F. Limit can be adjusted to meet system hot water requirements. Differential can be set to 15 ° and adjusted to control level. Lowering the differential will cause a slight variation in water temperature but will decrease burner on-off cycling. High limit should be set at least 20 ° above low limit.

User maintenance procedures

Boiler must be serviced & maintained

WARNING The boiler should be inspected and started annually, at the beginning of the heating season, only by a qualified service technician. In addition, the maintenance and care of the boiler designated on page 6 and explained on the following pages must be performed to assure maximum boiler efficiency and reliability. Failure to service and maintain the boiler and system could result in equipment failure, causing possible severe personal injury, death or substantial property damage.

NOTICE The following information provides detailed instructions for completing the maintenance items listed in the maintenance schedule, page 6. In addition to this maintenance, the boiler must be serviced and started up at the beginning of each heating season by a qualified service technician.

Component information

Rollout thermal fuse element

CGa, CGi, EG, & PEG only

Cuts off gas flow should flame rollout occur. See **Figure 1**.

WARNING Do not attempt to place boiler in operation if rollout thermal fuse element cuts off gas flow. Immediately call a service technician. Failure to do so can cause severe personal injury, death or substantial property damage.

Figure 1
Rollout thermal fuse element

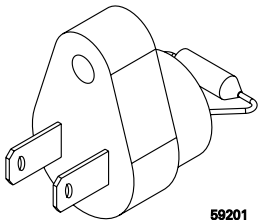

Spill switch

CGa, EG, & PEG only

Cuts off gas flow should vent system become blocked. See **Figure 2**.

WARNING Do not attempt to place boiler in operation if spill switch cuts off gas flow. Immediately call a service technician. Failure to do so can cause severe personal injury, death or substantial property damage.

Figure 2
Spill switch

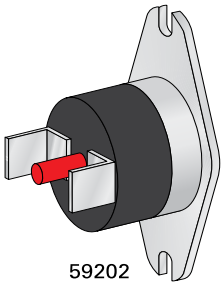

❑ Check daily . . . . . .

Boiler area

WARNING To prevent potential of severe personal injury, death or substantial property damage, eliminate all materials discussed below from the boiler vicinity. If found:

- Remove products immediately from the area. If they have been there for an extended period, call a qualified service technician to inspect the boiler and vent system for possible damage from acid corrosion.
- If products cannot be removed, immediately call a qualified service technician to install an outside combustion air source for the boiler (if not already installed).

1. Combustible/flammable materials — Do not store combustible materials, gasoline or any other flammable vapors or liquids near the boiler. Remove immediately if found.
2. Air contaminants — See listing of contaminants on page 3.

User maintenance procedures (continued)

❑ Check daily . . . . . .

Pressure/temperature gauge or pressure gauge (steam)

1. Water boilers — Make sure the pressure reading on the boiler pressure/temperature gauge does not exceed 24 psig. Higher pressure may indicate a problem with the expansion tank or gauge.
2. Steam boilers — Make sure the pressure reading on the boiler pressure gauge does not exceed 15 psig. Higher pressure indicates a problem with the gauge or limit control.
3. Contact a qualified service technician if problem persists.

Air openings

1. Verify that combustion and ventilation air openings to the boiler room and/or building are open and unobstructed.

❑ Check monthly . . . . . .

Boiler piping

1. Visually inspect for leaks around piping, circulators, relief valve and other fittings. Immediately call a qualified service technician to repair any leaks.

⚠WARNING Have leaks fixed at once by a qualified service technician. Continual fresh makeup water will reduce boiler life. Minerals can build up in sections, reducing heat transfer, overheating cast iron, and causing section failure.

⚠WARNING Do not use **petroleum-based cleaning or sealing compounds** in boiler system. Severe damage to boiler and system components can occur, resulting in possible severe personal injury, death or substantial property damage.

Venting system

⚠WARNING Failure to inspect the vent system as noted above and have them repaired by a qualified service technician can result in vent system failure, causing severe personal injury or death.

1. Visually inspect all parts or the flue gas venting system for any signs of blockage, leakage or joints or deterioration of the piping.
2. **CGa and EG boilers**:
   a. With boiler firing, hold a candle or match below lower edge of draft hood "skirt." If flame does not blow out, but burns undisturbed, the vent system is working properly.
   If flame blows out or flickers severely, the vent system must be checked for obstructions or other causes of improper venting.
   b. Verify the vent damper (CGa and EG boilers) opens before burners ignite.
3. Notify your qualified service technician at once if you find any problem.

Boiler relief valve . . . . . .

1. Inspect the boiler relief valve (see **Figure 3**) and the relief valve discharge pipe for signs of weeping or leakage.
2. If the relief valve often weeps:
   - **water boilers** — the expansion tank may not be working properly.
   - **steam boilers** — limit control may be set too high or there may be system problems.
   - Immediately contact your qualified service technician to inspect the boiler and system.

Figure 3 Relief valve

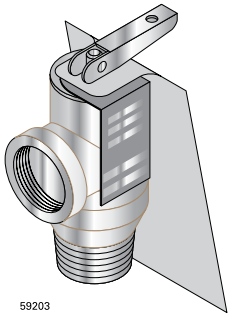

User maintenance procedures (continued)

❑ Check monthly . . . . . .

Automatic air vents (if used)

1. See **Figure 4**.
2. Remove the cap from any automatic air vent in the system and check operation by depressing valve **B** slightly with the tip of a screwdriver.
3. If the air vent valve appears to be working freely and not leaking, replace cap **A**, twisting all the way on.
4. Loosen cap A one turn to allow vent to operate.
5. Have vent replaced if it does not operate correctly.

Figure 4
Automatic air vent

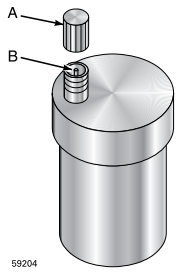

Pilot burner flame

Proper pilot flame (see **Figure 5**):

1. Blue flame.
2. Inner cone engulfing thermocouple or thermopile (standing pilot) or pilot flame sensor (spark-ignited pilot).
3. Thermocouple or thermopile, or pilot flame sensor glowing cherry red.

Improper pilot flame:

1. Overfired — Large flame lifting or blowing past pilot flame sensor.
2. Underfired — Small flame. Inner cone not engulfing pilot flame sensor.
3. Lack of primary air — Yellow flame tip.
4. Incorrectly heated pilot flame sensor.

Figure 5 Pilot burner and flame, typical

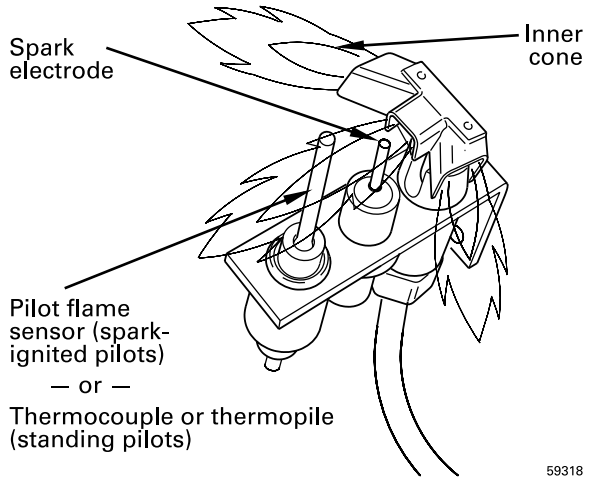

Main burner flame

Proper main burner flame (see **Figure 6**):

1. Yellow-orange streaks may appear (caused by dust).

Improper main burner flame:

1. Overfired — Large flames.
2. Underfired — Small flames.
3. Lack of primary air — Yellow tipping on flames (sooting will occur).

Figure 6 Main burner flame, typical

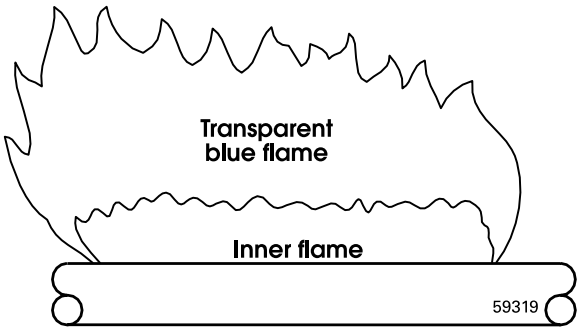

Check condensate drain system (if used)

1. Inspect condensate drain fittings and tubing. Verify that condensate can flow freely to drain.

User maintenance procedures (continued)

❑ Service periodically . . . . . .

Test low water cutoff – The system is equipped with a low water cutoff. Test the low water cutoff periodically during the heating season.

Float type — See Figure 7

1. Clean float type low water cutoff to clear float chamber of sediment.
   a. Open blowdown valve at bottom control.
   b. Drain water into a bucket.

⚠ DANGER Boiler pressure and temperature must be low to avoid the potential of severe burns from steam or hot water.

2. Check float type low water cutoff for proper operation.
   a. Turn operating control to call for heat.
   b. Before water gets hot, drain to bottom of gauge glass. Boiler should shut off after water level lowers a few inches.
   c. Refill boiler to correct waterline. Boiler should come back on.

Figure 7 Float type low water cutoff

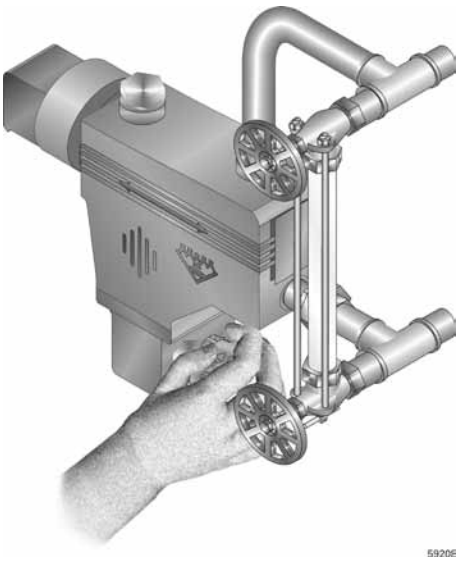

Probe type— See Figure 8

1. Clean probe type low water cutoff for proper operation.
   a. Turn off power to boiler and wait 5 minutes.
   b. Drain water to bottom of gauge glass.
   c. Turn on power.
   d. Set thermostat to call for heat. Red neon lamp on lower water cutoff should light.
   e. Wait 5 minutes. Boiler should not fire.
   f. Refill boiler to correct water line. Red lamp should go off.
   g. Wait 5 minutes. Boiler should fire.
   h. Return thermostat to normal setting.

Figure 8 Probe type low water cutoff

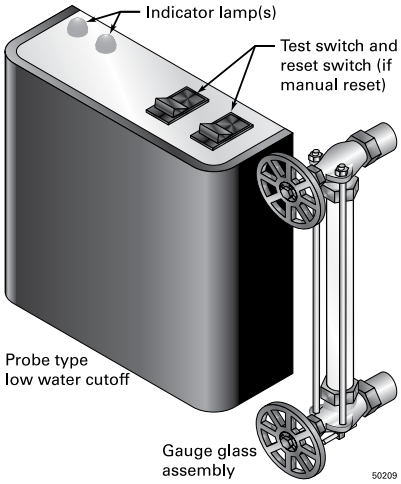

Integrated type— See Figure 9

1. Test LWCO using control LWCO TEST button.
   a. During burner fire, press LWCO TEST button.
   b. Burner should shut off.
2. Clean periodically (when warning occur).
   a. Turn off power to boiler wait 5 minutes.
   b. Drain boiler to empty.
   c. Remove sensor, wipe clean.
   d. Re-install sensor to specified 18 ft/lbs torque.
   e. Refill boiler to pressure, purge air.
   f. Turn on boiler power.
   g. Ensure proper operation resumes.

Figure 9 Integtrated type low water cutoff

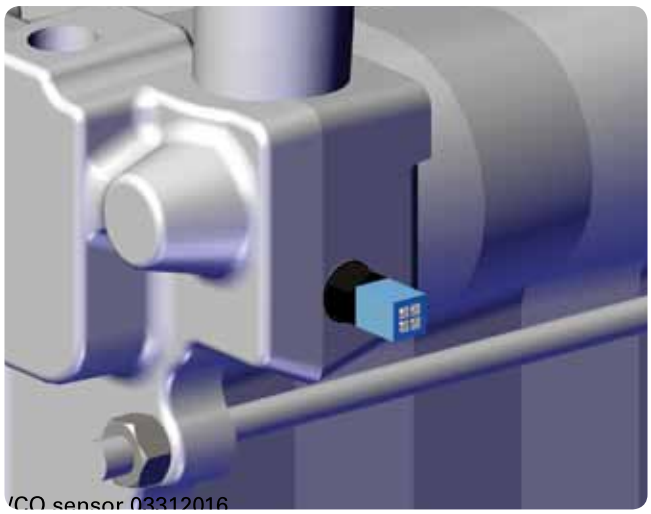

User maintenance procedures (continued)

❑ Service periodically continued . . . . . .

Clean gauge glass

Normal waterline on a steam boiler is halfway up gauge glass. See Figure 10. Clean when needed.

1. Close lower gauge cock.
2. Open pet cock.
3. Open lower gauge cock and allow a small amount of water to flush out through open pet cock.
4. Close pet cock.
5. Open lower gauge cock.
6. If gauge glass breaks, close both gauge cocks and call a qualified service technician to replace gauge glass. **Do not** replace with thin glass tubing.

⚠ DANGER Boiler pressure must be low to eliminate potential of severe burns.

Figure 10 Gauge glass

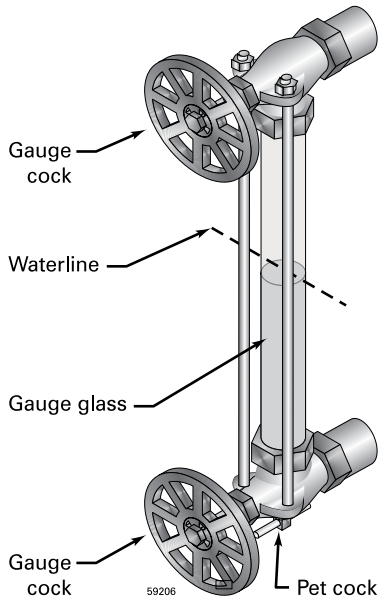

Oil inducer motor (CGi boilers)

1. **Use only SAE 20 motor oil. DO NOT use household universal oils.**

⚠ WARNING Use only SAE 20 motor oil to lubricate the inducer motor. Do not use common universal household oils.

2. **Place a few drops of oil in each of the two oiler cups on the inducer motor.**

❑ Service every 6 months . . . . . .

Operate boiler relief valve

⚠ WARNING To avoid water damage or scalding due to valve operation, a metal discharge line must be connected to relief valve outlet and run to a safe place of disposal. This discharge line must be installed by a qualified heating installer or service technician in accordance with the instructions in the **Boiler Manual**.
The discharge line must be terminated so as to eliminate possibility of severe burns should the valve discharge.

1. Before proceeding, verify that the relief valve outlet has been piped to a safe place of discharge, avoiding any possibility of scalding from hot water.
2. Read the boiler pressure/temperature gauge to make sure the system is pressurized.
3. Lift the relief valve top lever slightly, allowing water to relieve through the valve and discharge piping.
4. If water flows freely, release the lever and allow the valve to seat. Watch the end of the relief valve discharge pipe to ensure that the valve does not weep after the line has had time to drain. If the valve weeps, lift the seat again to attempt to clean the valve seat. If the valve continues to weep afterwards, contact your qualified service technician to inspect the valve and system.
5. If water does not flow from the valve when you lift the lever completely, the valve or discharge line may be blocked. Immediately shutdown the boiler, following the instructions on the inside jacket top Operating Instructions. Call your qualified service technician to inspect the boiler and system.

User maintenance procedures (continued)

❑ End-of-season shutdown . . . . . .

Follow boiler shutdown procedure

1. Follow "**TO TURN OFF GAS TO APPLIANCE**" on the **Operating instructions** on the inside of the jacket panel. You will also find these instructions on pages 13 through 19 of this manual.

   Use the **Operating instruction** for the gas valve model installed on the boiler.
2. Do not drain system unless exposure to freezing temperatures will occur.
3. Do not drain the system if it is filled with an antifreeze solution.
4. Do not shut down boilers used for domestic water heating. They must operate year-round.

Propane gas odorant

⚠WARNING

Propane boilers only — Your propane supplier mixes an odorant with the propane to make its presence detectable. In some instances, the odorant can fade and the gas may no longer have an odor.

- Propane gas can accumulate at floor level. Smell near the floor for the gas odorant or any unusual odor. If you suspect a leak, do not attempt to light the pilot.
- Use caution when attempting to light the propane pilot. This should be done by a qualified service technician, particularly if pilot outages are common.
- Periodically check the odorant level of your gas.
- Inspect boiler and system at least yearly to make sure all gas piping is leak-tight.
- Consult your propane supplier regarding installation of a gas leak detector. There are some products on the market intended for this purpose. Your supplier may be able to suggest an appropriate device.

Operating instructions

Use **Table 2** below to locate the correct Operating instruction for the gas valve model installed on your boiler.

Table 2 Operating instruction guide

Spark-ignited pilot	Models	Page
Honeywell VR8204/VR8304	**CGa-25 thru CGa-8** **EG-30 thru EG-75** **PEG-30 thru PEG-55**	13
	CGi-3 thru CGi-6	17
White-Rodgers 36E	**CGa-25 thru CGa-6** **EG-30 thru EG-50** **PEG-30 thru PEG-50**	14
	CGi-3 thru CGi-6	17
White-Rodgers 36C	**CGa-7 & CGa-8** **EG-55 thru EG-75** **PEG-55**	15
	CGi-3 thru CGi-6	17
Robertshaw 7200	**CGa-25 thru CGa-6** **EG-30 thru EG-50** **PEG-30 thru PEG-50**	16
—	**LGB**	18

Operating instructions

CGa, EG-30 to EG-75, PEG-30 to PEG-55,

- **Spark-ignited pilot**
- Gas valve — **Honeywell VR8204/VR8304**

FOR YOUR SAFETY READ BEFORE OPERATING

WARNING If you do not follow these instructions exactly, a fire or explosion may result causing property damage, personal injury or loss of life.

A. This appliance is equipped with an ignition device which automatically lights the pilot. Do not try to light the pilot by hand.

B. BEFORE OPERATING, smell all around the appliance area for gas. Be sure to smell next to the floor because some gas is heavier than air and will settle on the floor. See below.

C. Use only your hand to turn the gas control knob. Never use tools. If the knob will not turn by hand, don't try to repair it, call a qualified service technician. Force or attempted repair may result in a fire or explosion.

D. Do not use this appliance if any part has been under water. Immediately call a qualified service technician to inspect the appliance and to replace any part of the control system and any gas control, which has been under water.

WHAT TO DO IF YOU SMELL GAS

- Do not try to light any appliance.
- Do not touch any electric switch; do not use any phone in your building.
- Immediately call your gas supplier from a neighbor's phone. Follow the gas supplier's instructions.
- If you cannot reach your gas supplier, call the fire department.

OPERATING INSTRUCTIONS

1. STOP! Read the safety information above on this label.
2. Set the thermostat to lowest setting.
3. Turn off all electrical power to the appliance.
4. Remove front panel.
5. This appliance is equipped with an ignition device which automatically lights the pilot. Do not try to light the pilot by hand.
6. Turn gas control knob clockwise ↷ to "OFF."

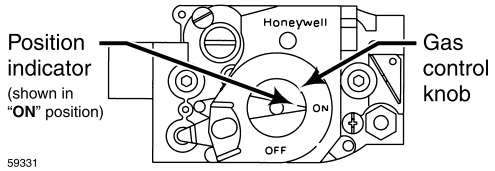

7. Wait five (5) minutes to clear out any gas. Then smell for gas, including near the floor. If you smell gas, STOP! Follow "B" in the safety information above. If you don't smell gas, go to the next step.
8. Turn gas control knob counterclockwise ↶ to "ON."
9. Turn on all electric power to the appliance.
10. Set thermostat to desired setting.
11. If the appliance will not operate, follow the instructions "To Turn Off Gas To The Appliance" and call your service technician or gas supplier.
12. Replace front panel.

TO TURN OFF GAS TO THE APPLIANCE

1. Set the thermostat to lowest setting.
2. Turn off all electric power to the appliance if service is to be performed.
3. Remove front panel.
4. Turn gas control knob clockwise ↷ to "OFF." Do not force.
5. Replace front panel.

550-223-041(0415)

Operating instructions

CGa-25 to CGa-6, EG-30 to EG-50, PEG-30 to PEG-50

- **Spark-ignited pilot**
- Gas valve — **White-Rodgers 36E**

FOR YOUR SAFETY READ BEFORE OPERATING

WARNING If you do not follow these instructions exactly, a fire or explosion may result causing property damage, personal injury or loss of life.

A. This appliance is equipped with an ignition device which automatically lights the pilot. Do not try to light the pilot by hand.

B. BEFORE OPERATING, smell all around the appliance area for gas. Be sure to smell next to the floor because some gas is heavier than air and will settle on the floor. See below.

C. Use only your hand to turn the gas control knob. Never use tools. If the knob will not turn by hand, don't try to repair it, call a qualified service technician. Force or attempted repair may result in a fire or explosion.

D. Do not use this appliance if any part has been under water. Immediately call a qualified service technician to inspect the appliance and to replace any part of the control system and any gas control, which has been under water.

WHAT TO DO IF YOU SMELL GAS

- Do not try to light any appliance.
- Do not touch any electric switch; do not use any phone in your building.
- Immediately call your gas supplier from a neighbor's phone. Follow the gas supplier's instructions.
- If you cannot reach your gas supplier, call the fire department.

OPERATING INSTRUCTIONS

1. STOP! Read the safety information above on this label.
2. Set the thermostat to lowest setting.
3. Turn off all electrical power to the appliance.
4. Remove front panel.
5. This appliance is equipped with an ignition device which automatically lights the pilot. Do not try to light the pilot by hand.
6. Turn gas control knob clockwise ↷ to "OFF."

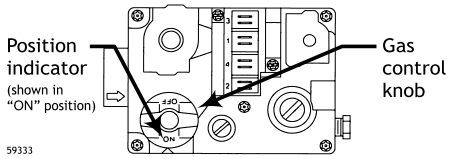

7. Wait five (5) minutes to clear out any gas. Then smell for gas, including near the floor. If you smell gas, STOP! Follow "B" in the safety information above. If you don't smell gas, go to the next step.
8. Turn gas control knob counterclockwise ↶ to "ON."
9. Turn on all electric power to the appliance.
10. Set thermostat to desired setting.
11. If the appliance will not operate, follow the instructions "To Turn Off Gas To The Appliance" and call your service technician or gas supplier.
12. Replace front panel.

TO TURN OFF GAS TO THE APPLIANCE

1. Set the thermostat to lowest setting.
2. Turn off all electric power to the appliance if service is to be performed.
3. Remove front panel.
4. Turn gas control knob clockwise ↷ to "OFF." Do not force.
5. Replace front panel.

550-223-042(0906)

Operating instructions

CGa-7, CGa-8, EG-55 to EG-75, PEG-55,

- **Spark-ignited pilot**
- Gas valve — **White-Rodgers 36C**

FOR YOUR SAFETY READ BEFORE OPERATING

WARNING **If you do not follow these instructions exactly, a fire or explosion may result causing property damage, personal injury or loss of life.**

A. This appliance is equipped with an ignition device which automatically lights the pilot. Do not try to light the pilot by hand.

B. BEFORE OPERATING, smell all around the appliance area for gas. Be sure to smell next to the floor because some gas is heavier than air and will settle on the floor. See below.

C. Use only your hand to depress or turn the gas control knob. Never use tools. If the knob will not depress or turn by hand, don't try to repair it, call a qualified service technician. Force or attempted repair may result in a fire or explosion.

D. Do not use this appliance if any part has been under water. Immediately call a qualified service technician to inspect the appliance and to replace any part of the control system and any gas control, which has been under water.

WHAT TO DO IF YOU SMELL GAS

- Do not try to light any appliance.
- Do not touch any electric switch; do not use any phone in your building.
- Immediately call your gas supplier from a neighbor's phone. Follow the gas supplier's instructions.
- If you cannot reach your gas supplier, call the fire department.

OPERATING INSTRUCTIONS

1. STOP! Read the safety information above on this label.
2. Set the thermostat to lowest setting.
3. Turn off all electrical power to the appliance.
4. Remove front panel.
5. This appliance is equipped with an ignition device which automatically lights the pilot. Do not try to light the pilot by hand.
6. Depress gas control knob slightly and turn clockwise ↷ to "OFF." Note: Knob cannot be turned to "OFF" unless knob is depressed slightly. Do not force.

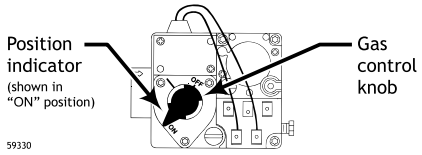

7. Wait five (5) minutes to clear out any gas. Then smell for gas, including near the floor. If you smell gas, STOP! Follow "B" in the safety information above. If you don't smell gas, go to the next step.
8. Turn gas control knob counterclockwise ↶ to "ON."
9. Turn on all electric power to the appliance.
10. Set thermostat to desired setting.
11. If the appliance will not operate, follow the instructions "To Turn Off Gas To The Appliance" and call your service technician or gas supplier.
12. Replace front panel.

TO TURN OFF GAS TO THE APPLIANCE

1. Set the thermostat to lowest setting.
2. Turn off all electric power to the appliance if service is to be performed.
3. Remove front panel.
4. Depress gas control knob slightly and turn clockwise ↷ to "OFF." Do not force.
5. Replace front panel.

550-223-043(0906)

Operating instructions

CGa-25 to CGa-6, EG-30 to EG-50, PEG-30 to PEG-50

- **Spark-ignited pilot**
- Gas valve — **Robertshaw 7200**

FOR YOUR SAFETY READ BEFORE OPERATING

WARNING If you do not follow these instructions exactly, a fire or explosion may result causing property damage, personal injury or loss of life.

A. This appliance is equipped with an ignition device which automatically lights the pilot. Do not try to light the pilot by hand.

B. BEFORE OPERATING, smell all around the appliance area for gas. Be sure to smell next to the floor because some gas is heavier than air and will settle on the floor. See below.

C. Use only your hand to depress or move the selector arm. Never use tools. If the selector arm will not depress or move by hand, don't try to repair it, call a qualified service technician. Force or attempted repair may result in a fire or explosion.

D. Do not use this appliance if any part has been under water. Immediately call a qualified service technician to inspect the appliance and to replace any part of the control system and any gas control, which has been under water.

WHAT TO DO IF YOU SMELL GAS

- Do not try to light any appliance.
- Do not touch any electric switch; do not use any phone in your building.
- Immediately call your gas supplier from a neighbor's phone. Follow the gas supplier's instructions.
- If you cannot reach your gas supplier, call the fire department.

OPERATING INSTRUCTIONS

1. STOP! Read the safety information above on this label.
2. Set the thermostat to lowest setting.
3. Turn off all electrical power to the appliance.
4. Remove front panel.
5. This appliance is equipped with an ignition device which automatically lights the pilot. Do not try to light the pilot by hand.
6. Depress and move selector arm left ↶ to "OFF." Note: Selector arm cannot be moved to "OFF" unless selector arm is depressed slightly. Do not force.

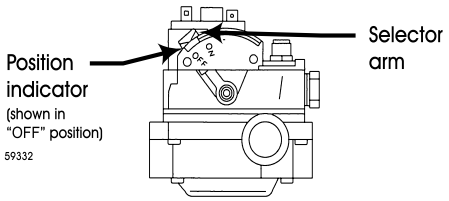

7. Wait five (5) minutes to clear out any gas. Then smell for gas, including near the floor. If you smell gas, STOP! Follow "B" in the safety information above. If you don't smell gas, go to the next step.
8. Move selector arm right ↷ to "ON."
9. Turn on all electric power to the appliance.
10. Set thermostat to desired setting.
11. If the appliance will not operate, follow the instructions "To Turn Off Gas To The Appliance" and call your service technician or gas supplier.
12. Replace front panel.

TO TURN OFF GAS TO THE APPLIANCE

1. Set the thermostat to lowest setting.
2. Turn off all electric power to the appliance if service is to be performed.
3. Remove front panel.
4. Depress and move selector arm to "OFF." Do not force.
5. Replace front panel.

550-223-044(0511)

Operating instructions

CGi

- **Spark-ignited pilot**
- Gas valve — **Honeywell VR8204/VR8304, White-Rodgers 36C and 36E**

FOR YOUR SAFETY READ BEFORE OPERATING

WARNING **If you do not follow these instructions exactly, a fire or explosion may result causing property damage, personal injury or loss of life.**

A. This appliance is equipped with an ignition device which automatically lights the pilot. Do not try to light the pilot by hand.

B. BEFORE OPERATING, smell all around the appliance area for gas. Be sure to smell next to the floor because some gas is heavier than air and will settle on the floor. See below.

C. Use only your hand to depress or turn the gas control knob. Never use tools. If the knob will not depress or turn by hand, don't try to repair it, call a qualified service technician. Force or attempted repair may result in a fire or explosion.

D. Do not use this appliance if any part has been under water. Immediately call a qualified service technician to inspect the appliance and to replace any part of the control system and any gas control, which has been under water.

WHAT TO DO IF YOU SMELL GAS

- Do not try to light any appliance.
- Do not touch any electric switch; do not use any phone in your building.
- Immediately call your gas supplier from a neighbor's phone. Follow the gas supplier's instructions.
- If you cannot reach your gas supplier, call the fire department.

OPERATING INSTRUCTIONS

1. **STOP !** Read the safety information above on this label.
2. Set the thermostat to lowest setting.
3. Turn off all electrical power to the appliance.
4. Remove jacket front panel.
5. This appliance is equipped with an ignition device which automatically lights the burner. Do not try to light the burner by hand.
6. Turn **Gas control knob** clockwise ↷ to **"OFF"**.
7. Wait five (5) minutes to clear out any gas. Then smell for gas, including near the floor. If you smell gas, **STOP !** Follow "B" in the safety information above. If you don't smell gas, go to the next step.
8. Turn **Gas control knob** counterclockwise ↶ to **"ON"**.
9. Turn on all electric power to the appliance.
10. Set thermostat to desired setting.
11. If the appliance will not operate, follow the instructions **"TO TURN OFF GAS TO APPLIANCE"** below and call your service technician or gas supplier.
12. Replace jacket front panel.

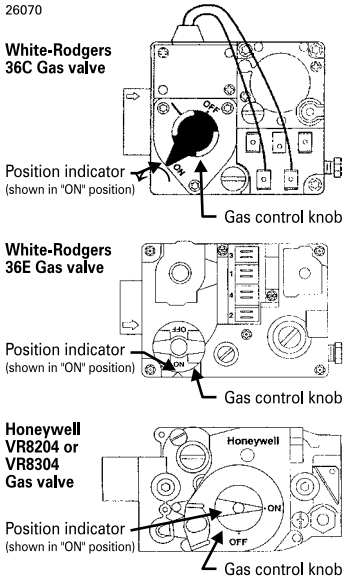

TO TURN OFF GAS TO THE APPLIANCE

1. Set the thermostat to lowest setting.
2. Turn off all electric power to the appliance if service is to be performed.
3. Remove jacket front panel.
4. Turn **Gas control knob** clockwise ↷ to "OFF." Do not force.
5. Replace jacket front panel.

Operating instructions

LGB

• Spark-ignited pilot

FOR YOUR SAFETY READ BEFORE OPERATING

⚠WARNING **If you do not follow these instructions exactly, a fire or explosion may result causing property damage, personal injury or loss of life.**

A. This appliance is equipped with an ignition device which automatically lights the pilot. Do not try to light the automatic pilot by hand.
For PROPANE BOILERS ONLY: Propane boilers contain both an automatic pilot and a manual (standing) pilot. A pilot switch box controls gas flow to the manual pilot. Follow instructions below to manually light the manual pilot. Do not try to light the automatic pilot by hand.

B. Before OPERATING, smell all around the appliance area for gas. Be sure to smell next to the floor because some gas is heavier than air and will settle on the floor. See below.

C. Use only your hand to depress or turn gas valve handles. Never use tools. If a handle will not turn by hand, don't try to repair it. Call a qualified service technician. Force or attempted repair may result in a fire or explosion.

D. Do not use this appliance if any part has been under water. Immediately call a qualified service technician to inspect the appliance and to replace any part of the control system and any gas control, which has been under water.

WHAT TO DO IF YOU SMELL GAS

- Do not try to light any appliance.
- Do not touch any electric switch; do not use any phone in your building.
- Immediately call your gas supplier from a neighbor's phone. Follow the gas supplier's instructions.
- If you cannot reach your gas supplier, call the fire department.

OPERATING INSTRUCTIONS

1. STOP! Read the safety information above this label.
2. Set the thermostat/operating control to the lowest setting.
3. Turn off all electrical power to the appliance.
4. Remove jacket front panel. On PROPANE BOILERS ONLY: Remove base access shield.
5. Close gas hand valve, **b**. Close manual test firing valve, **c**. Close all pilot shutoff valve(s), **g**.
6. Wait five (5) minutes to clear out any gas. Then smell for gas, including near the floor. If you smell gas, STOP! Follow **B** in the safety information above.
If you do not smell gas, go to step 7.
7. Open pilot shutoff valve(s), **g**.
8. On PROPANE BOILERS ONLY:
   - Press and hold reset lever of pilot switch box, **d**.
   - Manually light manual pilot, **e**, while holding the lever down.
   - Allow time for air to purge from the pilot line. Release lever after pilot flame has had time to heat thermocouple (about 1 minute). Pilot burner should remain lit.
9. Open manual test firing valve, **c**, and gas hand valve, **b**. Follow sequence below.
10. Turn on electric power to the appliance.
11. Set the thermostat/operating control to desired setting.
12. If boiler does not operate correctly, follow instructions under, "TO TURN OFF GAS TO APPLIANCE," below. Call your service technician or gas supplier.
13. On PROPANE BOILERS ONLY: Replace base access shield.
14. Replace jacket front panel.

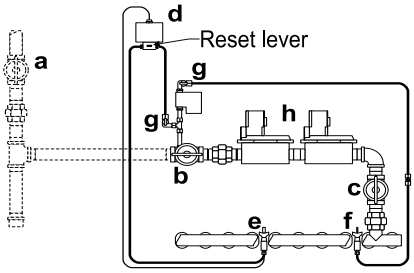

Typical gas piping only — See Control Supplement for details

- **a** service valve
- **b** gas hand valve
- **c** manual test firing valve
- **d** pilot switch box (propane only)
- **e** manual pilot (propane only)
- **f** automatic pilot
- **g** pilot shutoff valve(s)
- **h** automatic gas valves, typical

TO TURN OFF GAS TO THE APPLIANCE

1. Set thermostat or operating control to lowest setting.
2. Turn off all electrical power to the appliance if service is to be performed.
3. Close manual test firing valve (**c**), all pilot shutoff valve(s) (**g**) and gas hand valve (**b**).
4. Replace base access shield (on PROPANE BOILERS ONLY) and jacket front panel.

550-223-000(1209)

Common problems and solutions

Symptom	Common Causes	Possible Corrections
Rapid cycling — boiler turns on and off frequently	Thermostat installed where drafts or heat affect reading	Locate thermostat on inner wall away from heat sources or cool drafts.
	Heat anticipator in thermostat adjusted incorrectly	Adjust thermostat per manufacturer's instructions.
	Incorrect limit setting	Set limit according to system needs. Maximum setting is 220°F. Increase limit setting to decrease cycling.
	Insufficient water flow through boiler	Check all valves to and from boiler. Return to proper setting.
		Confirm circulator size.
Frequent release of water through relief valve	Expansion tank sized too small	Call qualified service technician to check expansion tank operation and size.
	Flooded expansion tank	Call qualified service technician to check expansion tank operation.
	Inoperative limit control	Call qualified service technician to replace limit control.
Need to frequently add makeup water	Leaks in boiler or piping	Have qualified service technician repair leaks at once to avoid constant use of makeup water. Makeup water can cause mineral deposits which, in turn, can cause boiler section failure. Do not use petroleum-base stop-leak compounds.
Black water condition	Oxygen corrosion due to leaks in boiler and piping	Have qualified service technician repair at once. Keep pH of water between 7.0 to 8.5.
Popping or percolating noise heard in boiler	Mineral deposits in sections due to constant use of makeup water	Call qualified service technician to de-lime boiler, if necessary. In some cases, deposits will be too heavy to remove with de-liming procedures.
		Have qualified service technician repair leaks to eliminate need for constant makeup water.
	Incorrect pH of boiler water	Call qualified service technician to check pH level and correct. pH should be maintained between 7.0 to 8.5.
	Insufficient water flow through boiler	Check all valves to and from boiler. Return to proper setting.
		Confirm circulator size.
Metal flakes found in vent outlet or vent — flueway corrosion	Contaminated combustion air supply — See page 3 in this manual.	Remove any contaminating products. See page 3 in this manual.
		Provide outside air for combustion.
	Condensation of combustion gases in boiler sections	Have qualified service technician inspect system piping and controls to verify proper regulation of return water temperature.
Some radiators or baseboard units do not heat or are noisy	Air in system	Bleed air from system through air vents in radiators or baseboard units.
	Low system pressure	Fill to correct pressure.
		Check for leaks in boiler or piping. Have qualified service technician repair at once.
	High limit set too low	Adjust high limit to higher setting.

WEIL-McLAIN®

Weil-McLain
500 Blaine Street
Michigan City, IN 46360-2388
http://www.weil-mclain.com